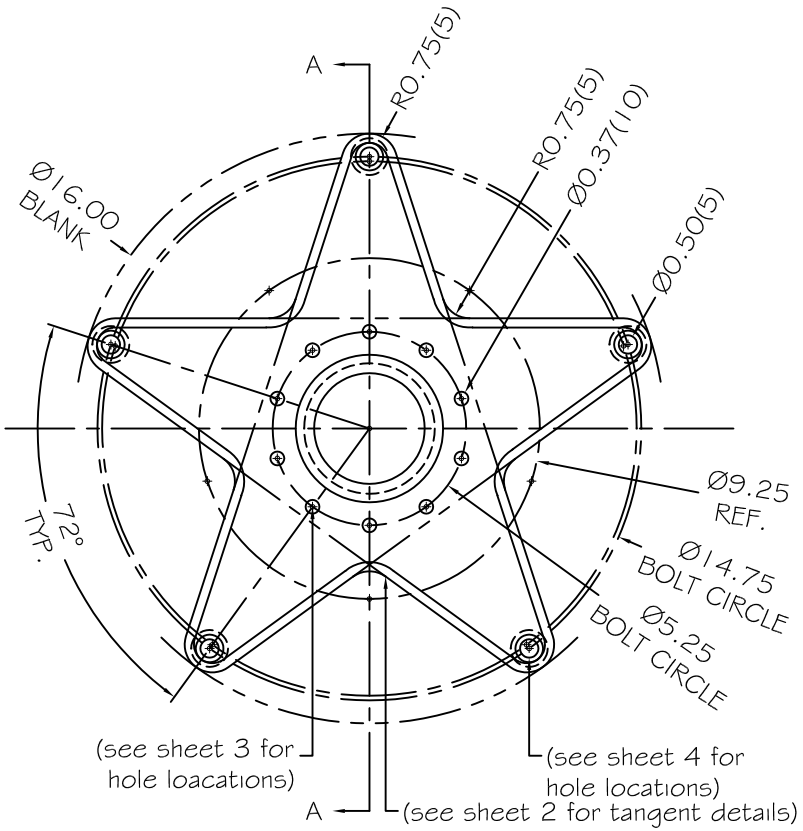

FRONT VIEW

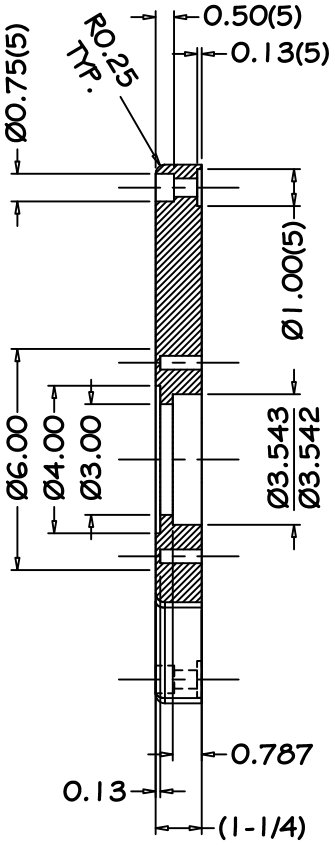

SECT. A-A

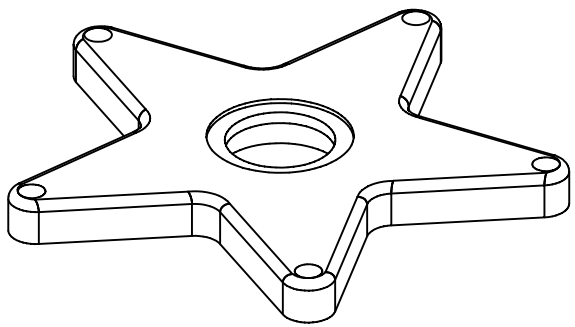

ISO - FRONT VIEW

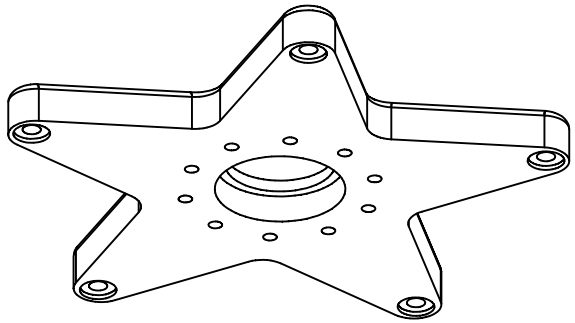

ISO - REAR VIEW

AREA:	100.23 in^2		
PERIMETER:	55.91"		
VOLUME:	109.44 in^3		
WEIGHT:	10.6 lbs.		

Pdesign

REV. NO.:	DESCRIPTION:	DATE:	BY:
1	MODS. FOR 16" BLANK	03/10	WP

This drawing and the information contained thereon is the property of Pdesign.
This drawing and the information is not to be printed, photographed, copied, loaned, manufactured from, used or reproduced in any maner or through any means whatsoever without the prior writen authorization of Pdesign.

UNLESS OTHERWISE INDICATED
1. DO NOT SCALE
2. DIMENSIONS ARE IN INCHES
3. REMOVE SHARP EDGES

DIMENSIONING TOLERANCE
ANGLES = +/- 0.5°
.X=+/- 1/8" .XXX=+/- 1/32"
.XX=+/- 1/16" .XXXX=+/- INDICATE

ITEM DESC.:	TRIKE DIFFERENTIAL STAR		
MAT'L DESC.:	ALUMINUM: 1-1/4"		
DRAWN BY: WP	DATE: 02/10	REVISION NO.: 1	
SCALE: N.T.S.	DWG. SIZE: A	DWG. NO.: P1000101	